GreenIsland

FC0401U/FC0401R

INSTRUCTION SHEET

Flame detector Relays

Flame Detector Relays FC0401U and FC0401R are essentially switches which, when used with the appropriate sensors, can signal the presence or absence of a flame or ultraviolet (UV) light.

- Flame present and power indication.
- Plug-in mounts onto a sub-base for surface mounting. (Housing meets IP40)

SPECIFICATIONS

MODELS:

Type	Notes	Ffrt*	Supply Voltage
FC0401R220	For rectification type sensor. Such as flame rod and Honeywell C7012A (220Vac, 50Hz)	1 s	230 Vac 50Hz
FC0401U220	For non-self checking UV sensor. Such as Honeywell C7027A/C7035A/ C7044A	1 s	230 Vac 50Hz

ELECTRICAL RATING:
230Vac (+ 10 % to - 15%), 50/60 Hz.
CONTACT: 2 isolated DPDT contacts.
Rating: 1.5 A at 0.65power factor.
AMBIENT TEMPERATURE LIMITS:
-10 to + 45 ° C
MAXIMUM RELATIVE HUMIDITY:
90% RH at + 40 ° C.
DEGREE OF PROTECTION: IP40
FLAME FAILURE RESPONSE TIME :
Less than one second (standard models).
Other timings available on request.

INSTALLATION

IMPORTANT

1. Disconnect the power supply before beginning the installation.
2. Whenever possible, use the burner/boiler manufacturer's instructions. If these are not provided, follow the instructions below.

Ffrt: flame failure response time.

ONLY FOR FC0401U: you have an internal fuse to protect your flame detector. F 0.2 A 250 V/F

Mount the sub-base

1. The sub-base may be installed in any plane, but the vertical is recommended.
2. Ensure that sufficient space is available to access the relay for servicing or removal.

Wire the sub-base

1. Wiring and overload protection should conform to local electrical regulations
2. Verify that the wiring is correct before plugging in the relay.

Mount relay on the sub-base

1. Plug the relay into the sub-base.
2. Secure the relay to the sub-base by tightening the two captive screws on the relay face.
3. When installation is completed, check the flame current value as described below.

CHECKOUT AFTER INSTALLATION

Check the points on this list before starting the system

- That system overload protection is correct.
- That wiring connections are correct and that all terminal screws are tight
- That the flame detector is correctly installed and that the correct flame detector is being used.
- That the burner is completely purged and ready to fire with the fuel lines purged of air
- That the combustion chamber and flues are clear of fuel. That power is on at the system main switch.

FLAME DETECTOR CHECKOUT

The performance of the relay depends upon how well the flame detector is installed. For guidance on how to properly install a flame detector, consult the burner/boiler manufacturer's instructions and the information packed with the detector.

Note: the following have an influence on flame detector performance.

(1) Position, size and burning characteristics of the flame.

(2) Ambient temperature at the detector (except flame rod). See detector instruction sheet.

(3) Temperatures of sensor

Flame rods: ensure suitable rod.

Other sensors: see relevant data sheets.

(4) If the main supply power voltage is over the electrical rating, it will affect the sensitive of flame detection or damage the sensor.

TYPICAL WIRING DIAGRAMS

FC0401R220 (recommended)

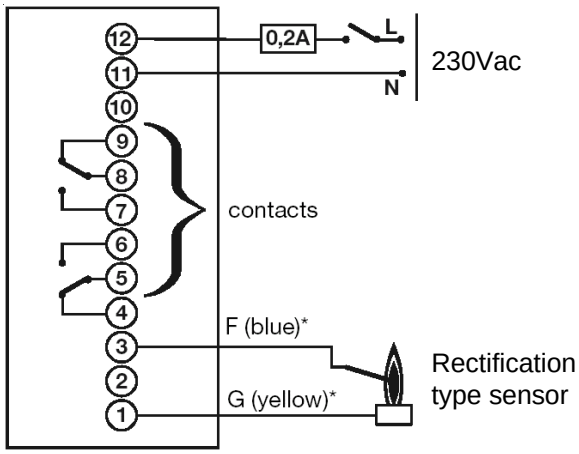

* Only for Honeywell C7012A 230Vac type

FC0401U220 (recommended)

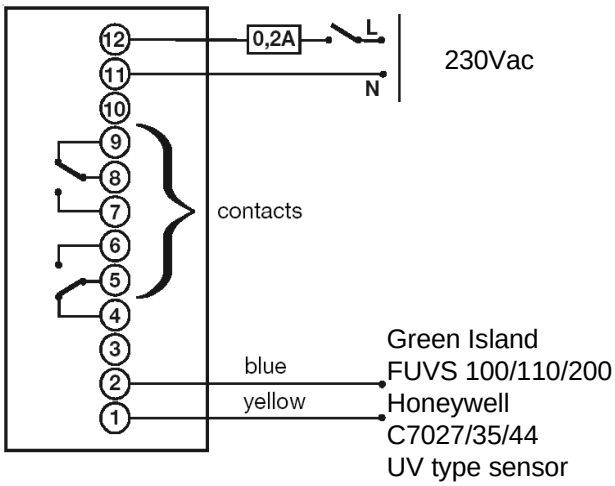
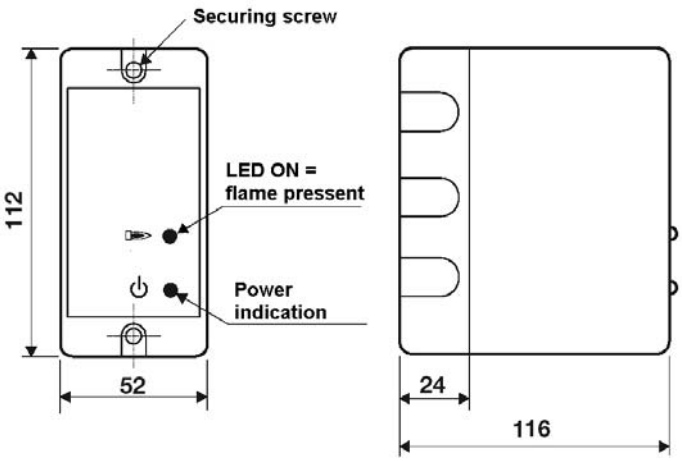
DIMENSIONS